Deltana DSB33

3" x 3" x Square Corners Solid Brass Hinge

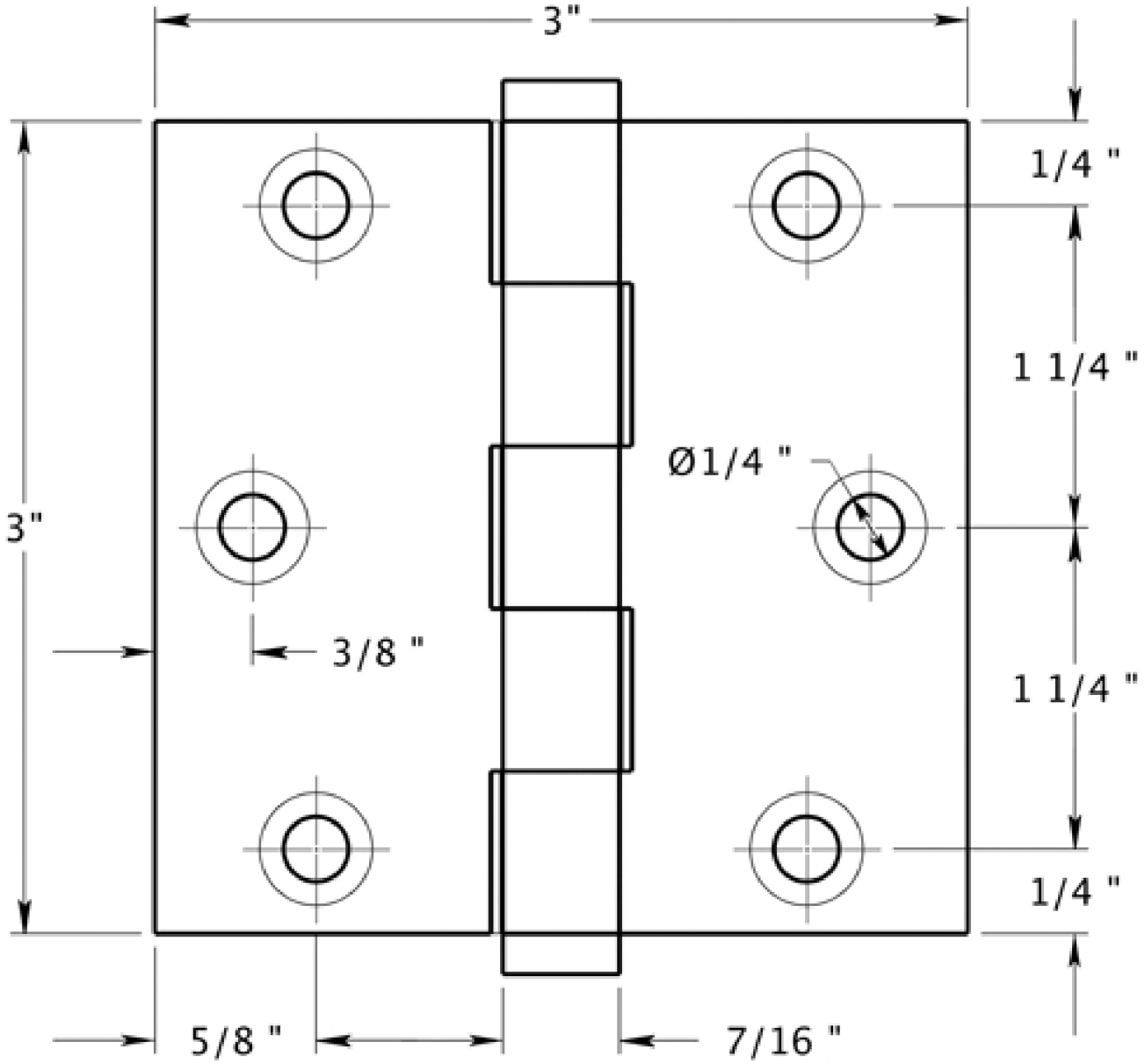

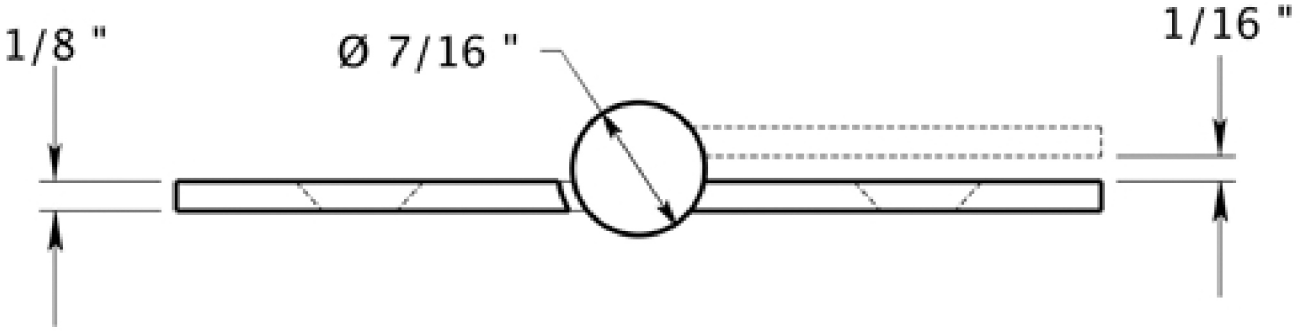

Doorware.com™