Deltana DSB35R5x-R

3-1/2” x 3-1/2” x 5/8” Radius Residential Solid Brass Hinge

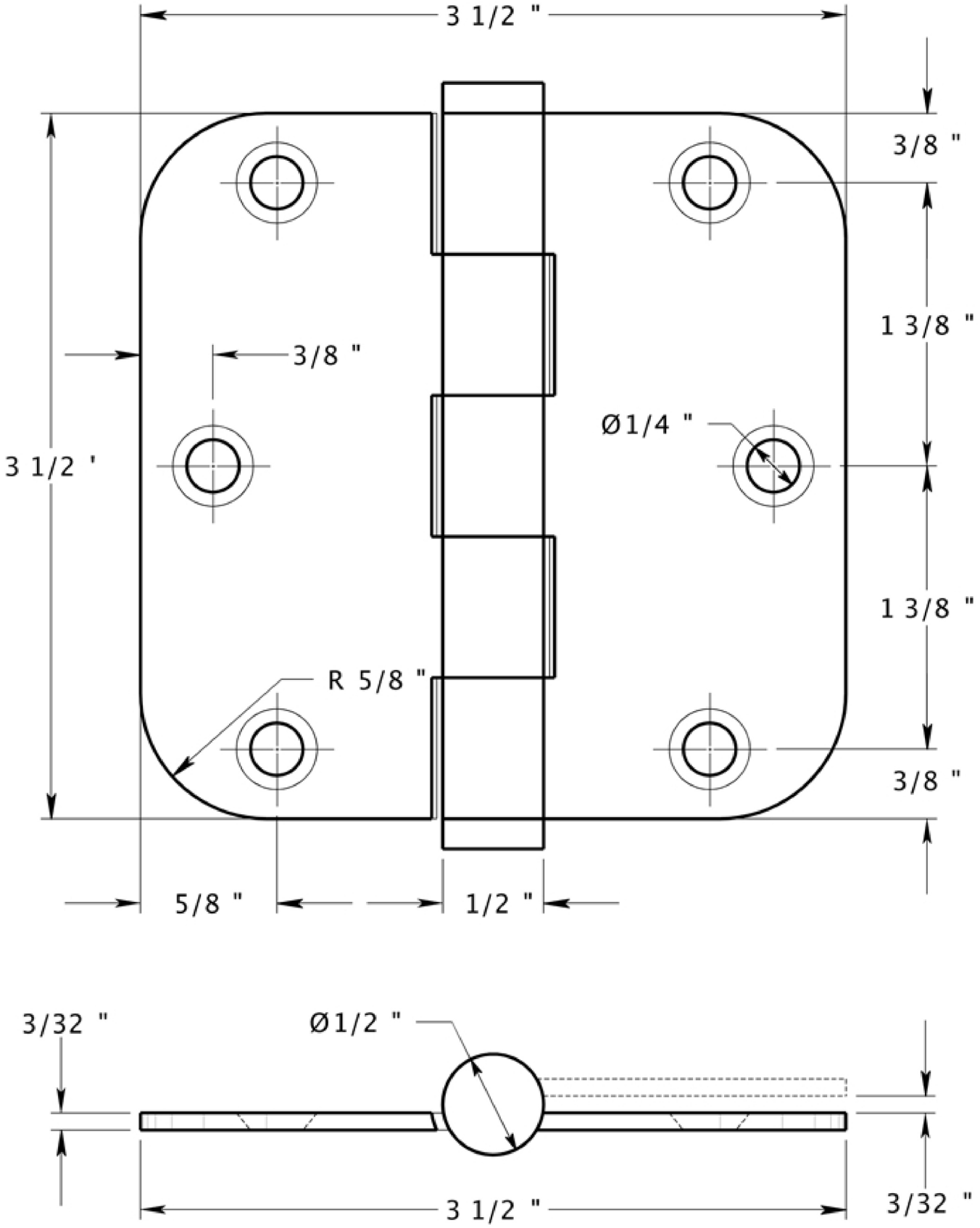

Doorware.com™