Deltana DSB4R4x-RZ

4” x 4” x 1/4” Radius, Residential Solid Brass Hinge, ZigZag Holes

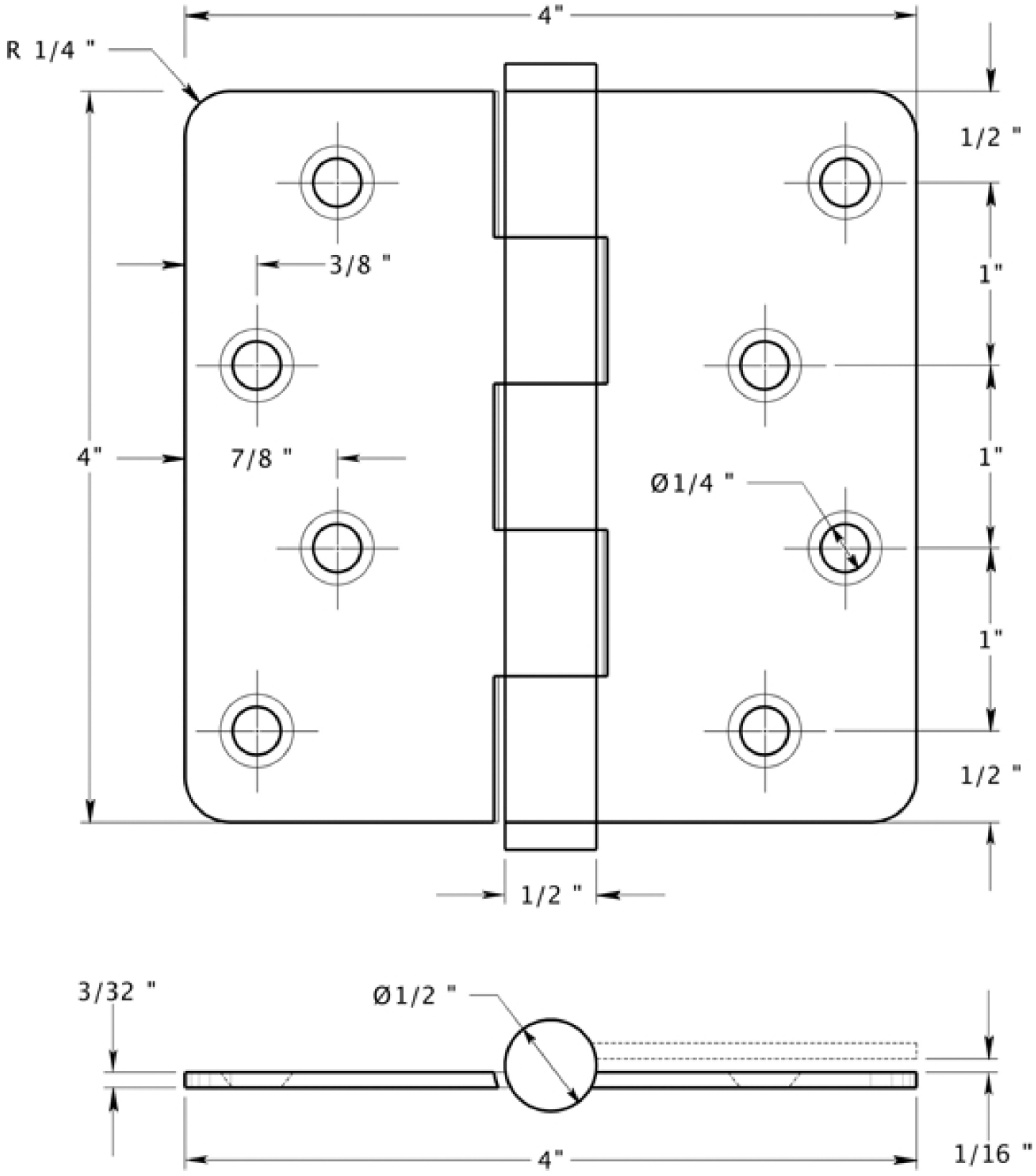

Doorware.com™