Deltana DSH35R4 - 3-1/2" x 3-1/2" x 1/4" Radius Spring Hinge

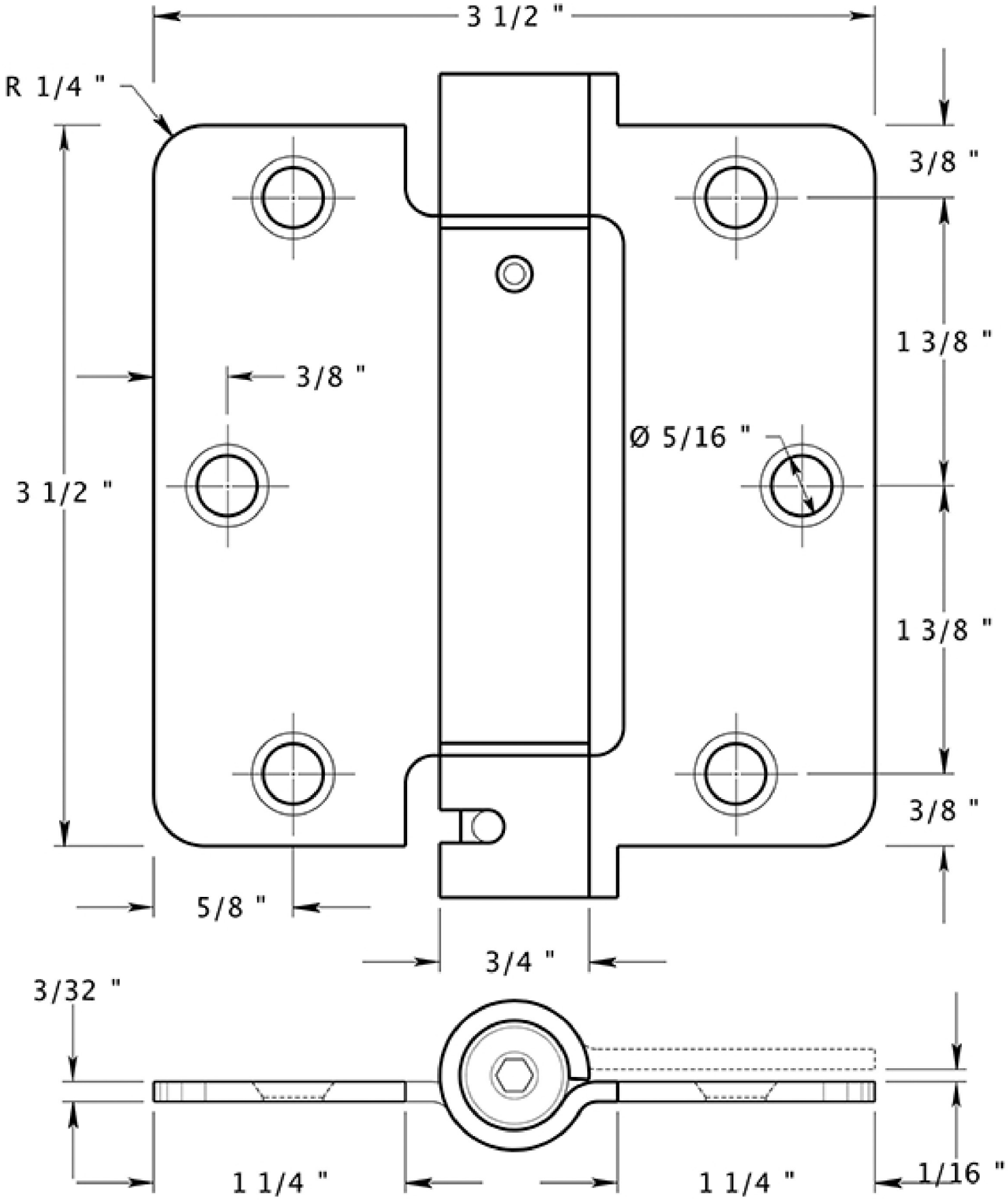

Doorware.com™