Deltana DSPA4080 - 4 x 8 Solid Brass Parliament Hinge

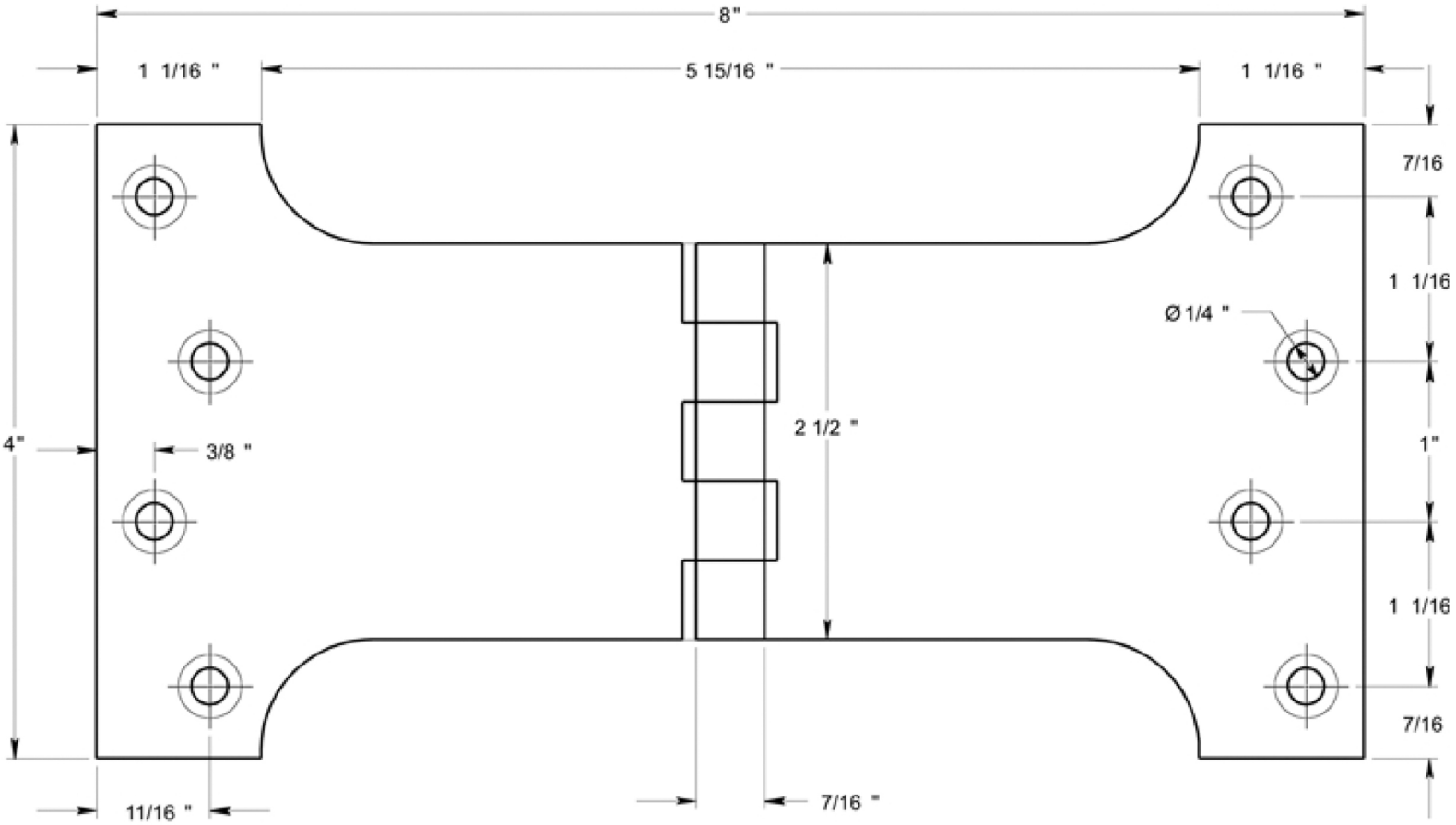

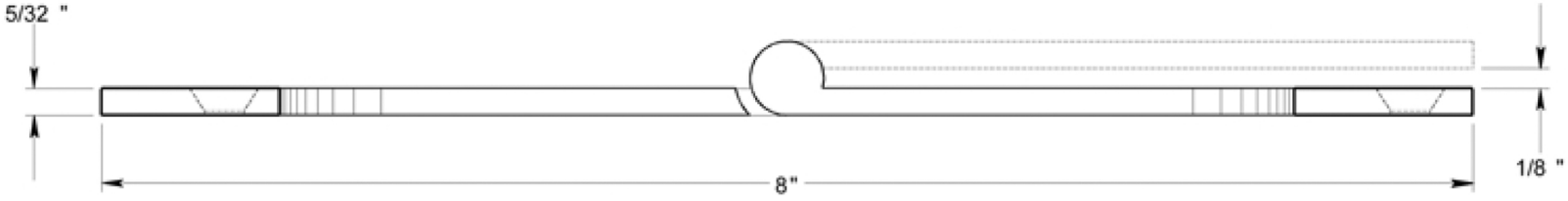

Doorware.com™