Deltana S35R5x-BT

3-1/2” x 3-1/2” x 5/8” Residential Steel Hinge with Ball Tips

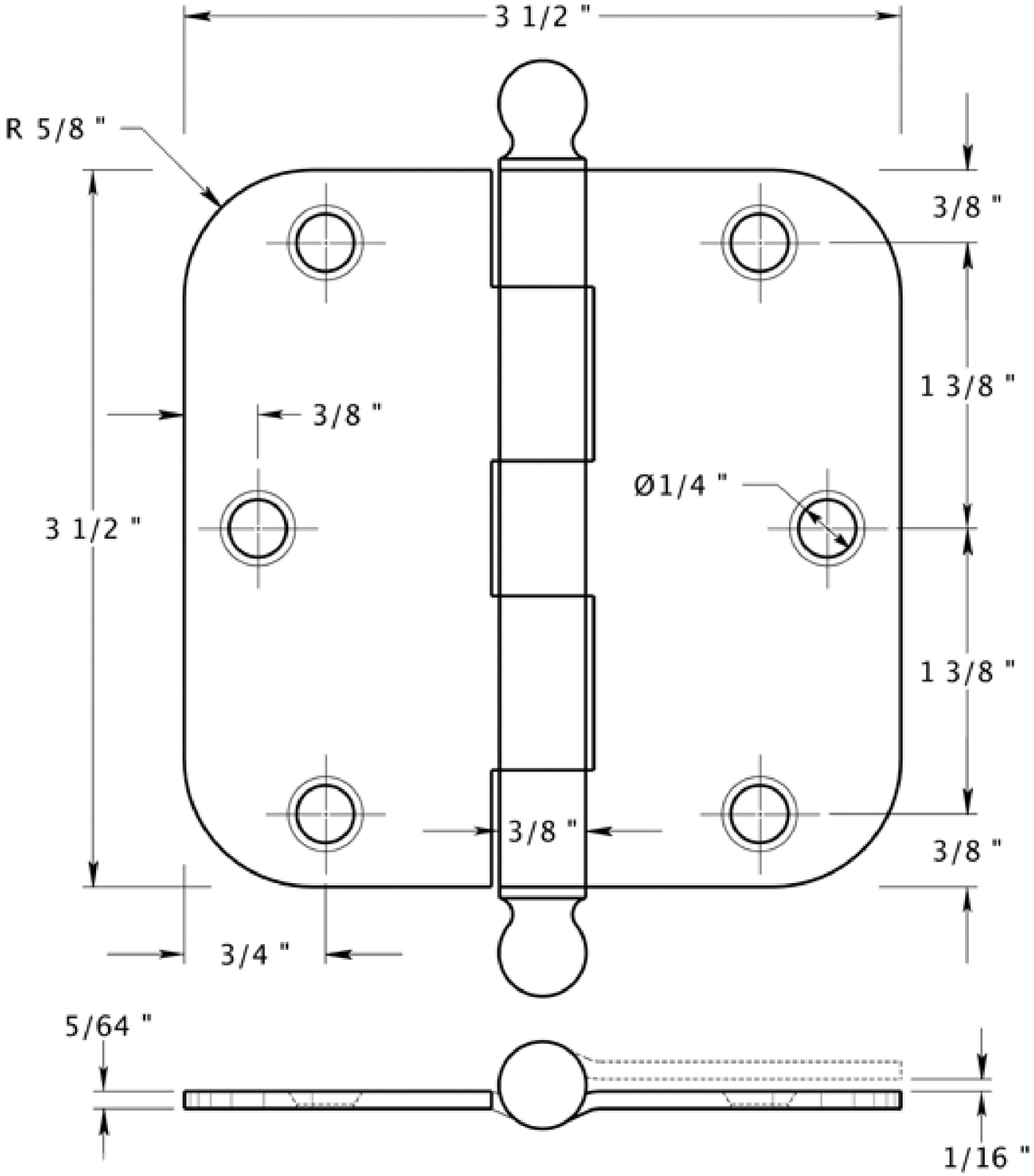

Doorware.com™