Deltana S44R4HD

4 x 4 x 1/4 Radius Heavy Duty Steel Hinge

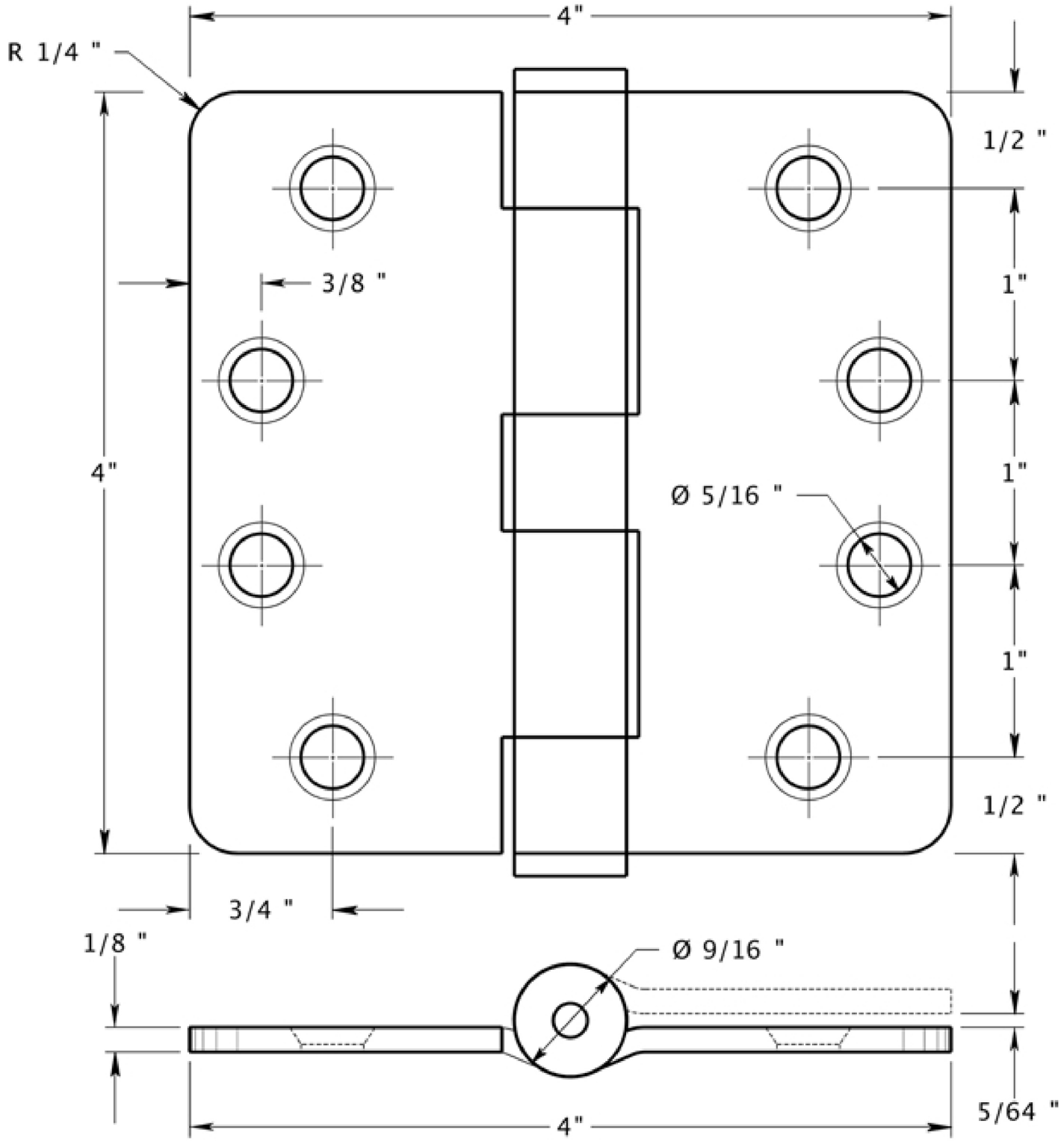

Doorware.com™