DEL-DSH35U32D - 3-1/2" Stainless Steel Spring Hinge

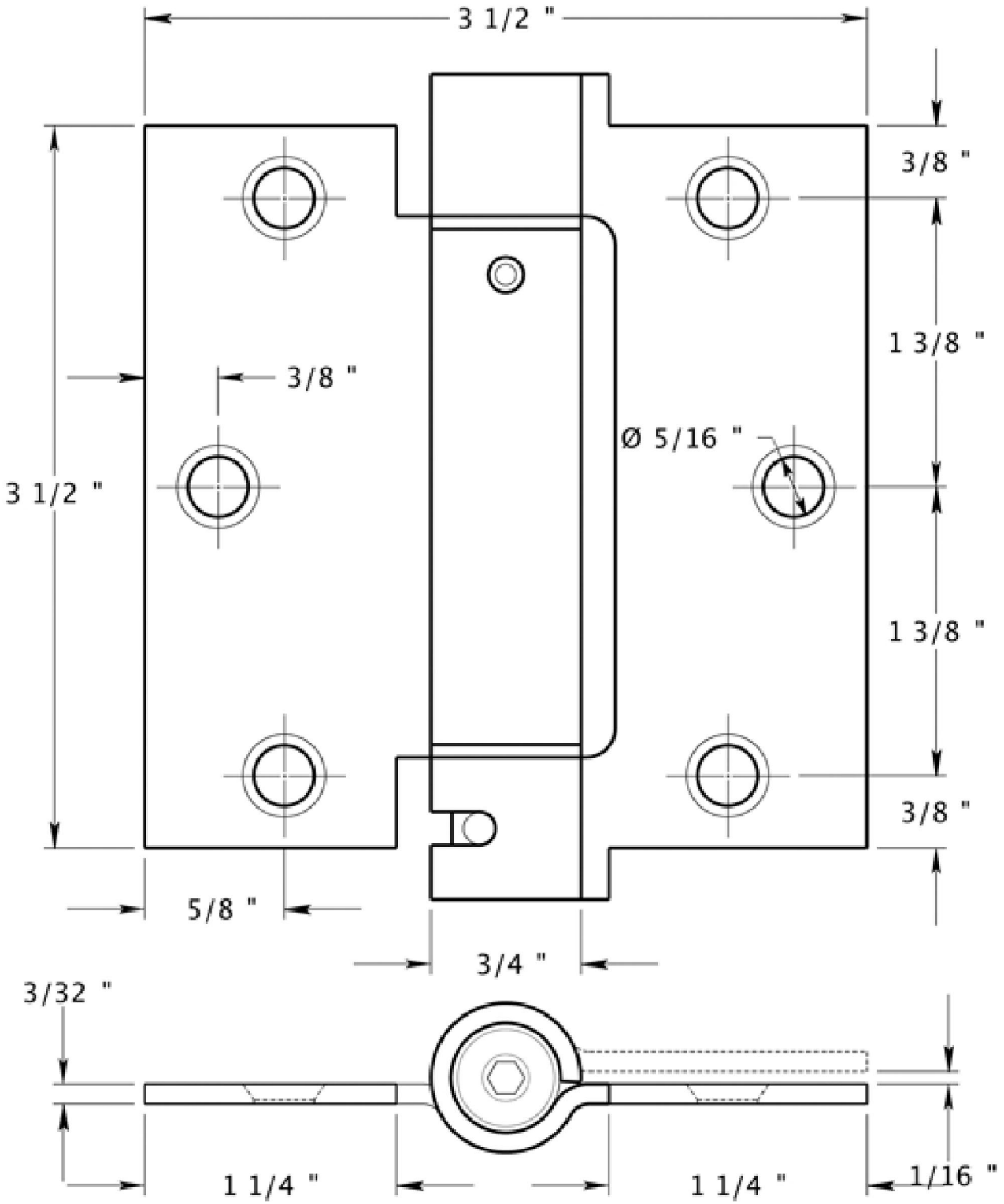

Doorware.com™