DEL-FPGM18 - 18” Modern Offset Surface Bolt

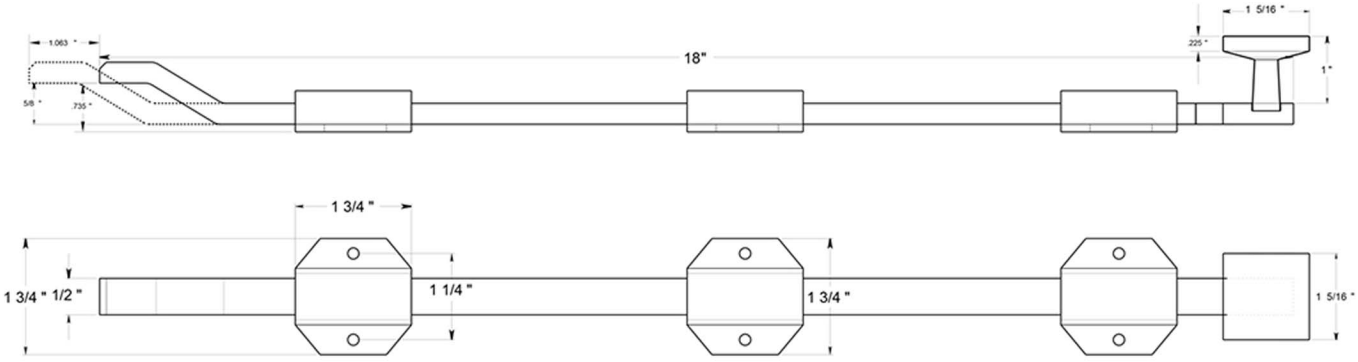

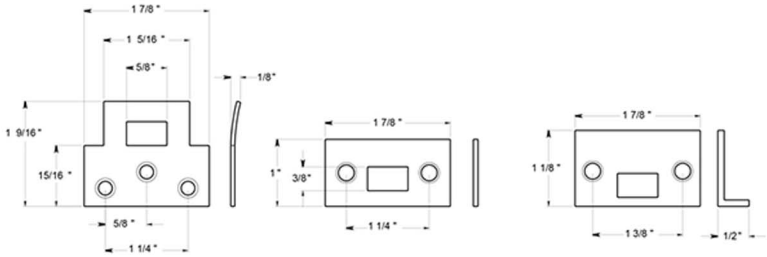

Doorware.com™