Don-Jo A2SS Adjustable Strike Plate

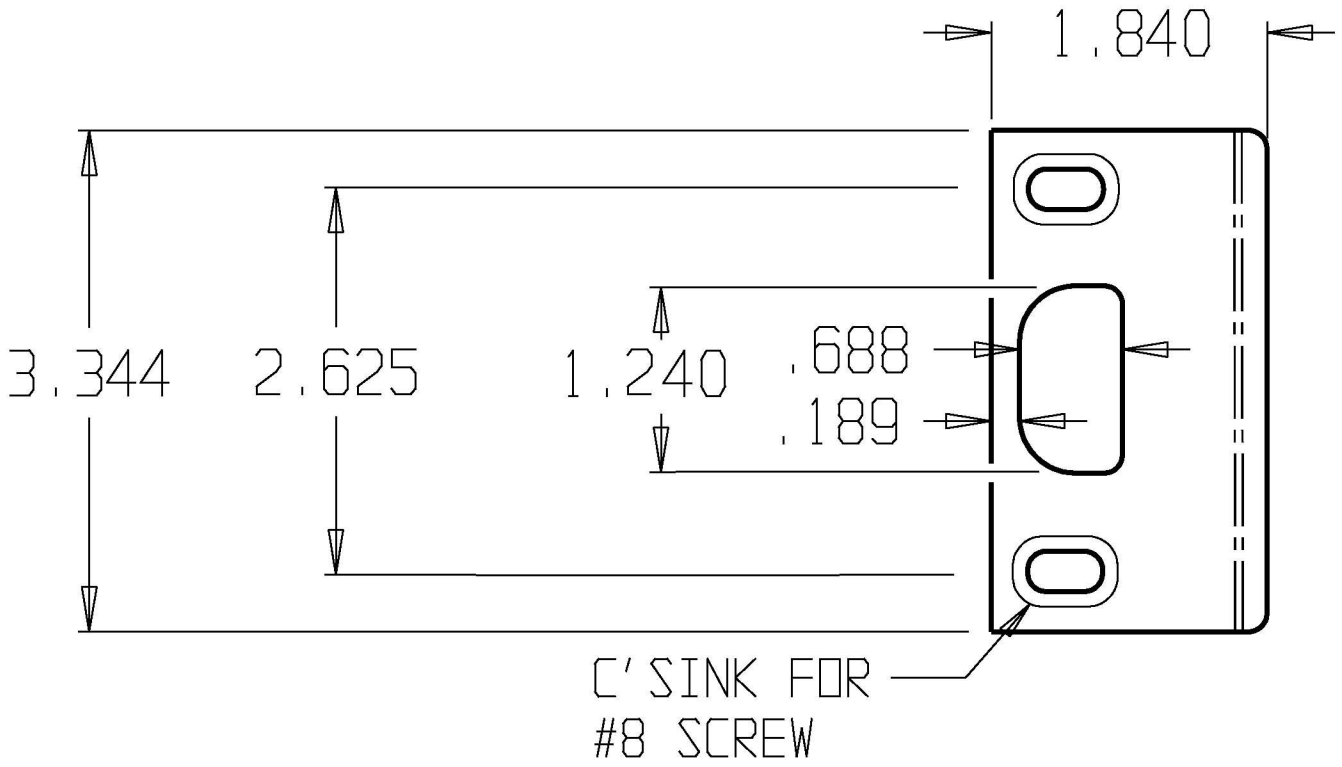

Doorware.com™