DON-JO WSLP-104-630 Latch Guard Plate

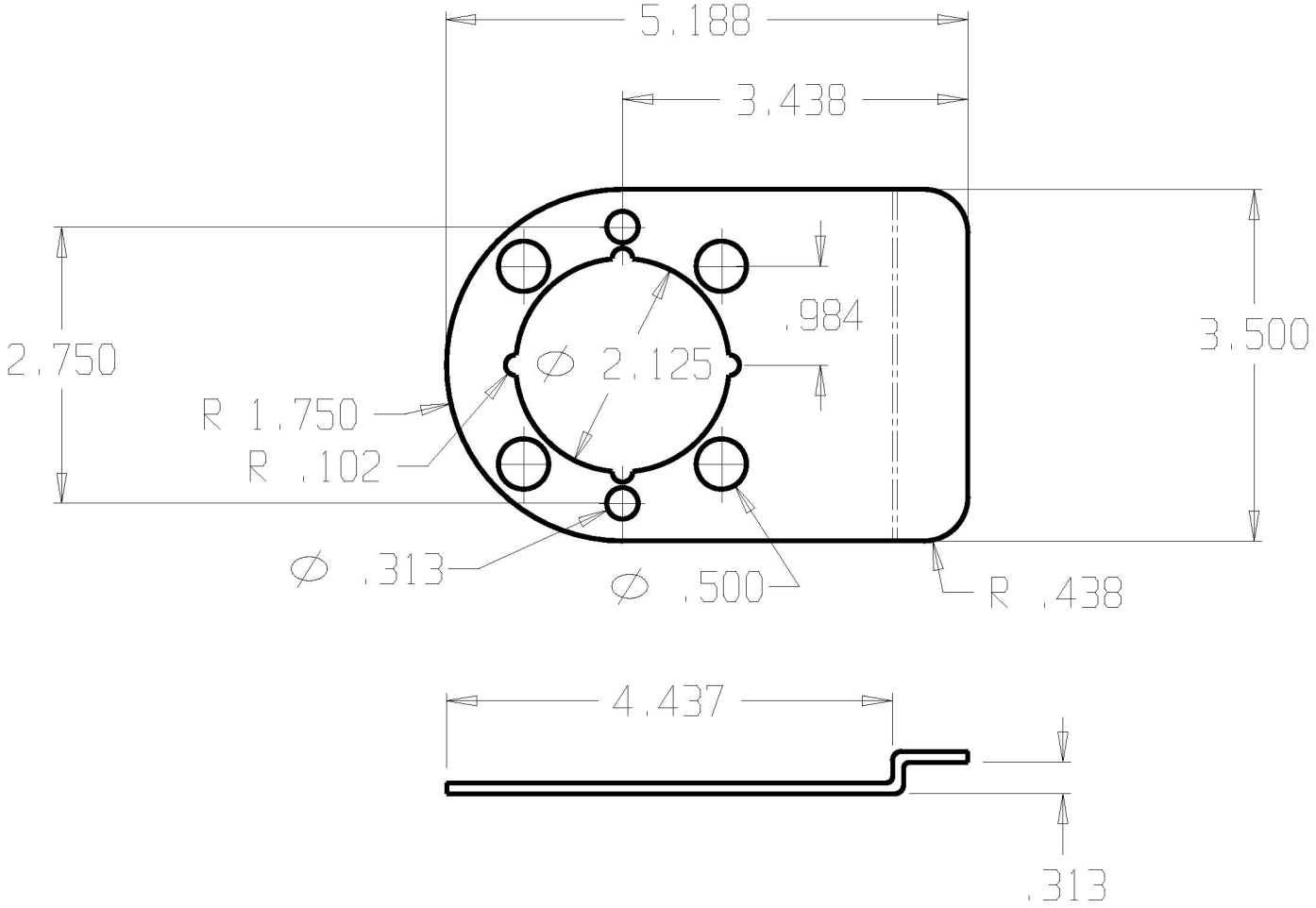

Doorware.com™